FIG.7: Relative variations of gate trigger current, holding current and latching current versus junction temperature

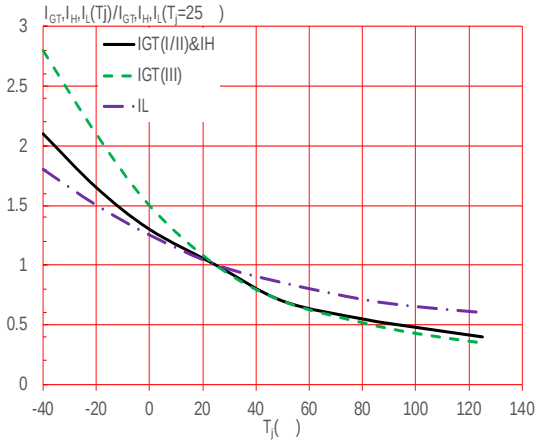

FIG.8 Test circuit for inductive and resistive loads to IEC-61000-4-5 standards

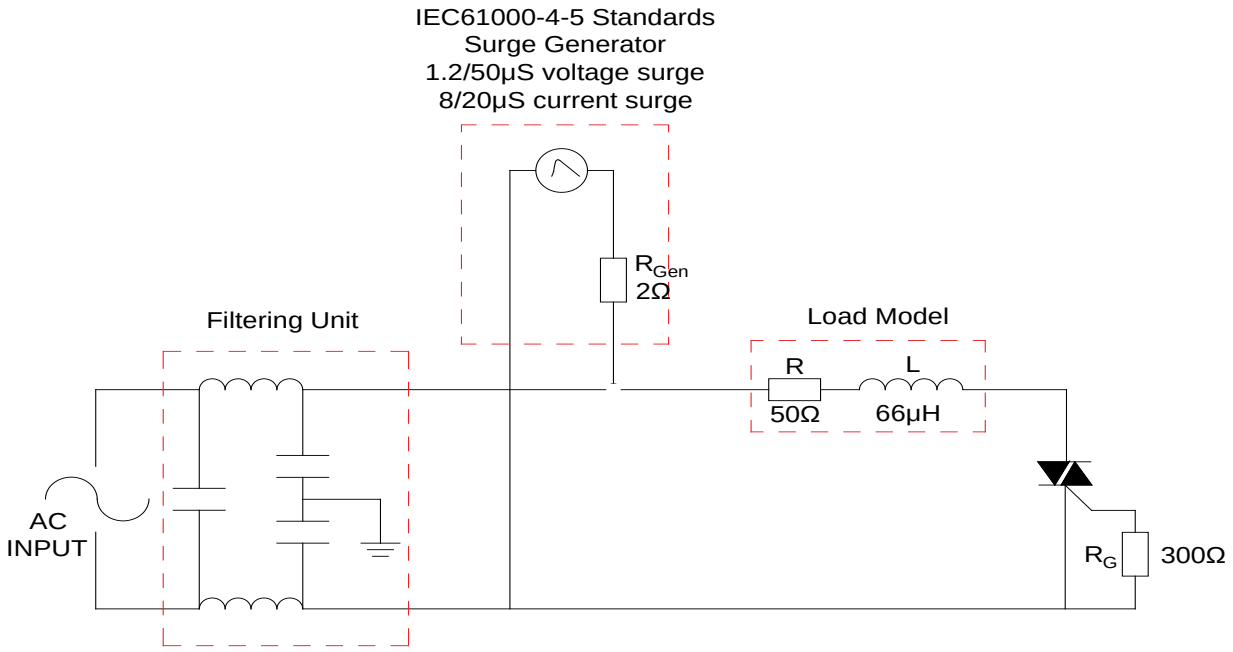

ACJT01V-1000TW

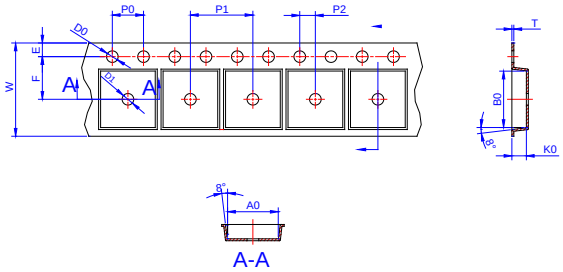

Ref.	Dimensions					
	Millimeters			Inches		
	Min.	Typ.	Max.	Min.	Typ.	Max.
W	-		12.30	-		0.482
E	1.65	1.75	1.85	0.065	0.069	0.073
F	5.45	5.50	5.55	0.215	0.217	0.219
D0		1.55	1.60		0.061	0.063
D1		-	-			
P0	3.90	4.00	4.10	0.154	0.157	0.161
P1	7.90	8.00	8.10	0.311	0.315	0.319
P2	1.95	2.00	2.05	0.077	0.079	0.081
10P0	39.80	40.00	40.20	1.567	1.575	1.583
A0	6.85	6.95	7.05	0.269	0.273	0.276
B0	7.15	7.25	7.35	0.280	0.284	0.288
K0	1.95	2.05	2.15	0.076	0.080	0.084
T	0.20	0.25	0.30	0.008	0.010	0.012

ACJT01V-1000TW **Jie**